Revision: 03
Approved: 06.08.2025

Processing instructions

EGGER Wall Profiles



EGGER Wall profiles provide a visually harmonious and functional connection between EGGER worktops and the wall. The coordinated range of colours plus the matching shaped parts and sealing lips create unity in colour and design. EGGER wall profiles are easy to apply and fit.

Profiles

EGGER Wall profiles have two parts and consist of a base and upper profile:

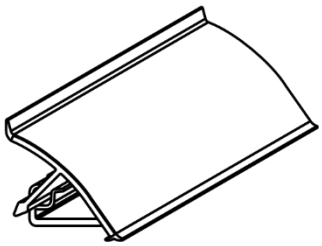

Base profile with upper profile

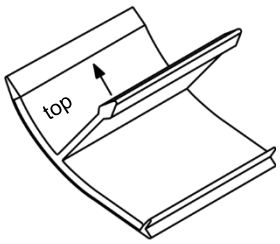

Upper profile

In addition to decorative aspects, the upper profile also has a protective function due to the integrated upper sealing lip and the double sealing lip in the lower area as a supporting edge.

Shaped parts

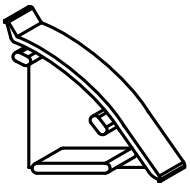

End caps left/right

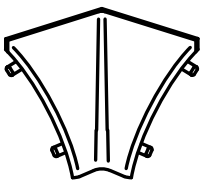

Inner corner 90°

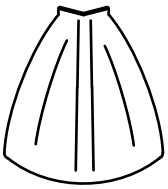

Outer corner 90°

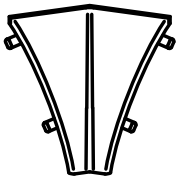

Inner corner 135°

The various shaped parts match the sealing lips in terms of colour.

Processing

Before fitting the wall profiles to the worktop, the longitudinal edge and all transverse edges which connect to a wall must be sealed. EGGER wall profiles can be processed quickly in a few simple steps. To ensure a flawless finish, proceed in the following sequence:

1. After measuring, the base and upper profiles are cut at right angles to the required length. Take the returns into account when measuring. Take the appropriate measurements from the illustrations below.

2. When attaching the base profile, ensure that the worktop surface is predrilled in the screw fastening area. The holes must be at least 1 mm larger than the screw diameter to prevent stresses building up in the material. We also recommend protecting the inside of the screw hole with sealant before screwing.

3. Screw the base profile to the worktop. Ensure that the hole separation from the end is no more than 20 mm and that the base profile is seated correctly against the wall. Countersunk screws must not be used for installation. Here, Spax round head screws with full thread 3 x 15 mm (seven items per meter) are recommended.

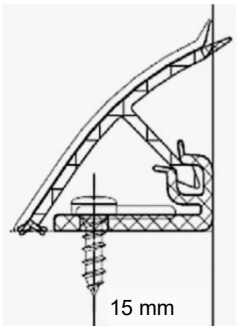

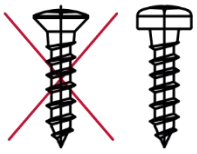

Screwing base profile

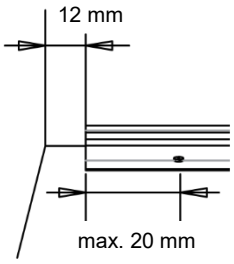

Fixing dimensions base profile

4. The upper profile is attached to the base profile and pressed in. If necessary use a hammer plus wooden block. In the process, the double sealing lip must rest on the worktop and the single sealing lip must face upwards.

5. Start the assembly of the upper profile at an internal corner. Attach the shaped part for the internal corner (90° or 135°) on the upper profile and start with the assembly in the corresponding corner. Before the upper profile engages completely into the base profile up to another corner, the next shaped part is attached first.

6. Attach end caps left and right on the profile ends.

Returns

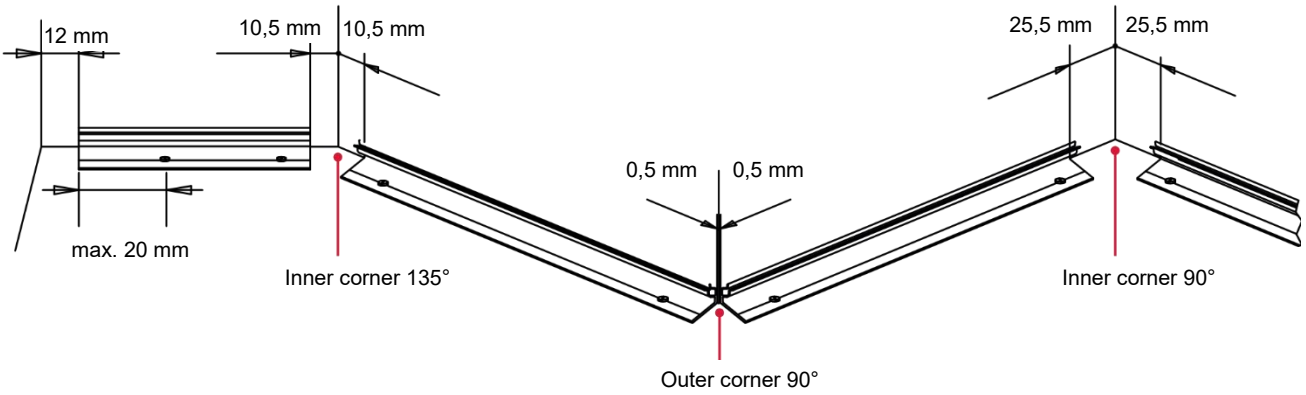

Returns of the base profile

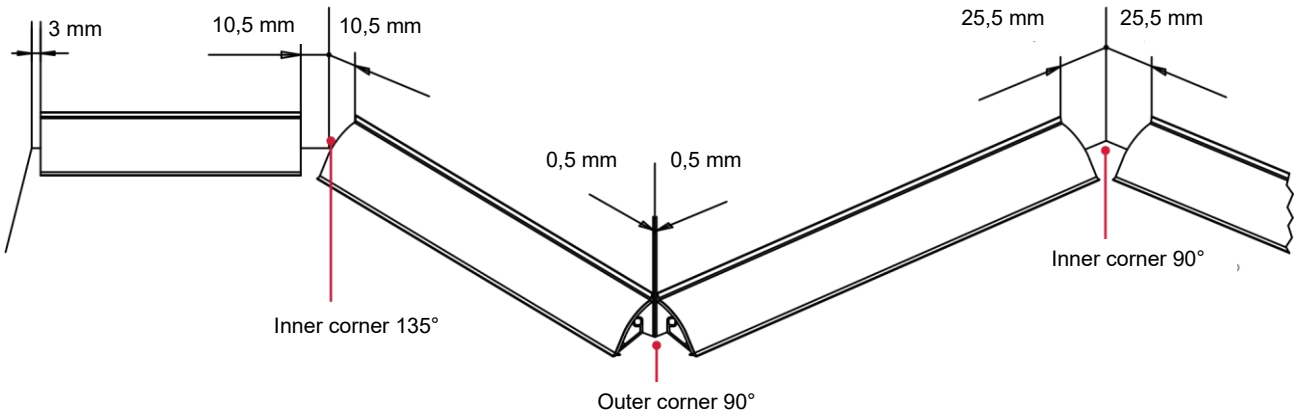

Returns of the upper profile

Please note: EGGER Wall profiles, shaped parts and sealing lips have a temperature resistance of 70°C. Gas ovens or open flame gas cookers will exceed this temperature on the outside edge of the pan base. To ensure the wall profile is not exposed to heat damage, we recommend a safety margin of 3 cm between the rear edge of the pan and the front edge of the wall profile. For electric hobs, follow the manufacturer's installation instructions.

Care and cleaning recommendation

Clean the wall profiles, sealing lips and shaped parts with a household cleaner or mild cleaning agent. The decor surfaces do not require any special care due to their resistant and hygienic, dense surfaces. The surfaces are generally easy to clean. Do not use sanitary cleaners or detergents with abrasive components, as using such cleaners may lead to changes in the degree of gloss and/or scratch the material. Strong aggressive solvents, such as thinners, acetone or MEK are not permitted, as they can result in damage to the decor or material.

For detailed information, please refer to the leaflet "Cleaning and care recommendations for EGGER product surfaces".

Additional documents / Product information

The accessories for the wall profiles includes small parts such as screws. Information on the risk of swallowing / storage out of the reach of children. For more information on the product or processing, please refer to the documents listed below:

- Technical leaflet "EGGER Wall Profiles"
- Processing Instructions "EGGER Worktops"

Provisional note:
This technical leaflet has been carefully drawn up to the best of our knowledge. The information provided is based on practical experience, in-house testing and reflects our current level of knowledge. It is intended for information only and does not constitute a guarantee in terms of product properties or its suitability for specific applications. We accept no liability for any mistakes, errors in standards, or printing errors. In addition, technical modifications may result from the continuous development of EGGER Wall Profiles, as well as from changes to standards and public law documents. The contents of this technical leaflet should therefore not be considered as instructions for use or as legally binding. Our General Terms and Conditions apply.

qualityaustria SYSTEMZERTIFIZIERT ISO 9001:2015 NR.00184/0

CERTIFIED IQNet MANAGEMENT SYSTEM